Welcome to my portfolio

Mark Watkinson

www.illustrationx.com/sg/**MarkWatkinson**

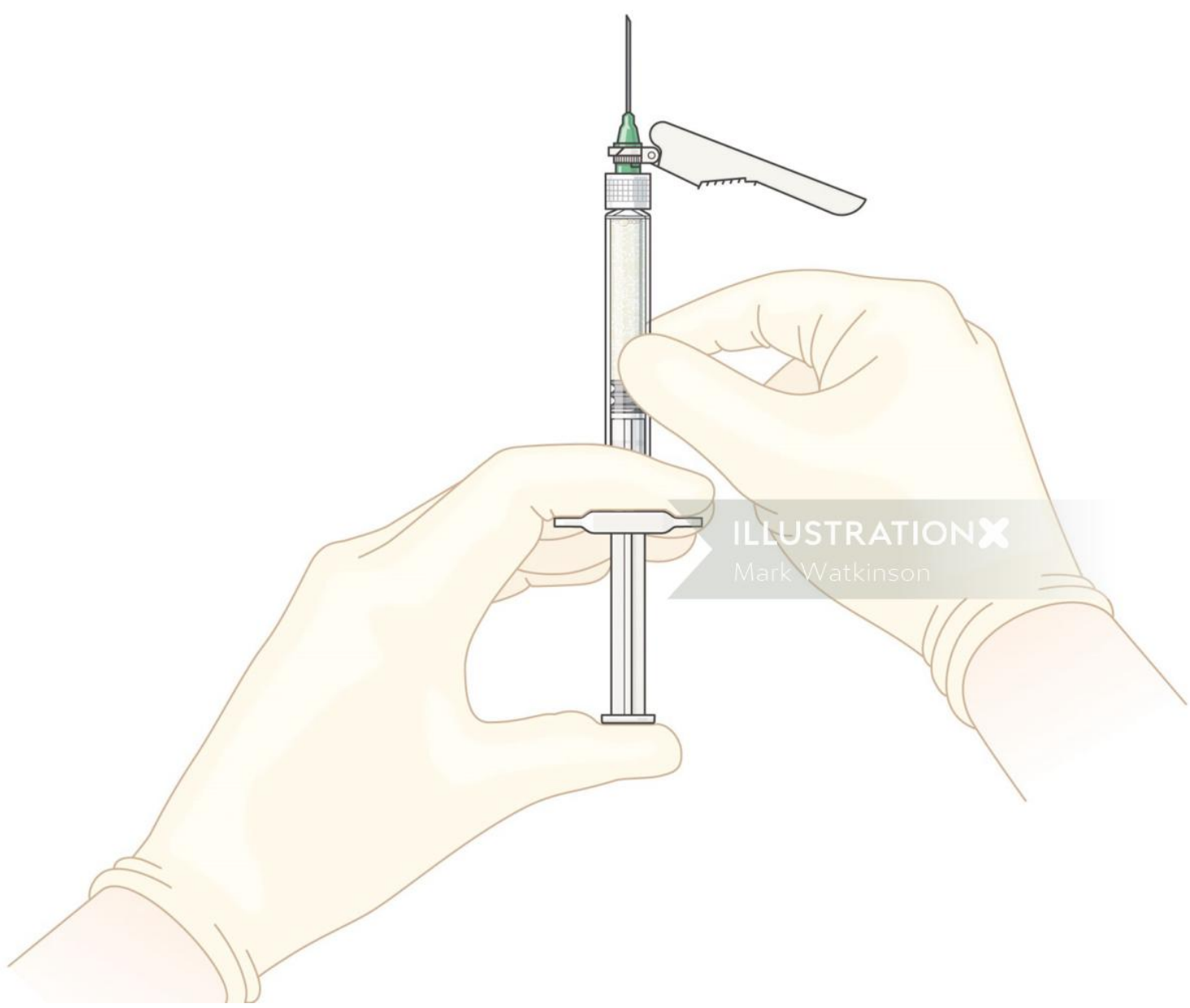

© All rights reserved

ILLUSTRATIONX
Connecting You to a World of Illustration

Mark Watkinson

www.illustrationx.com/sg/**MarkWatkinson**

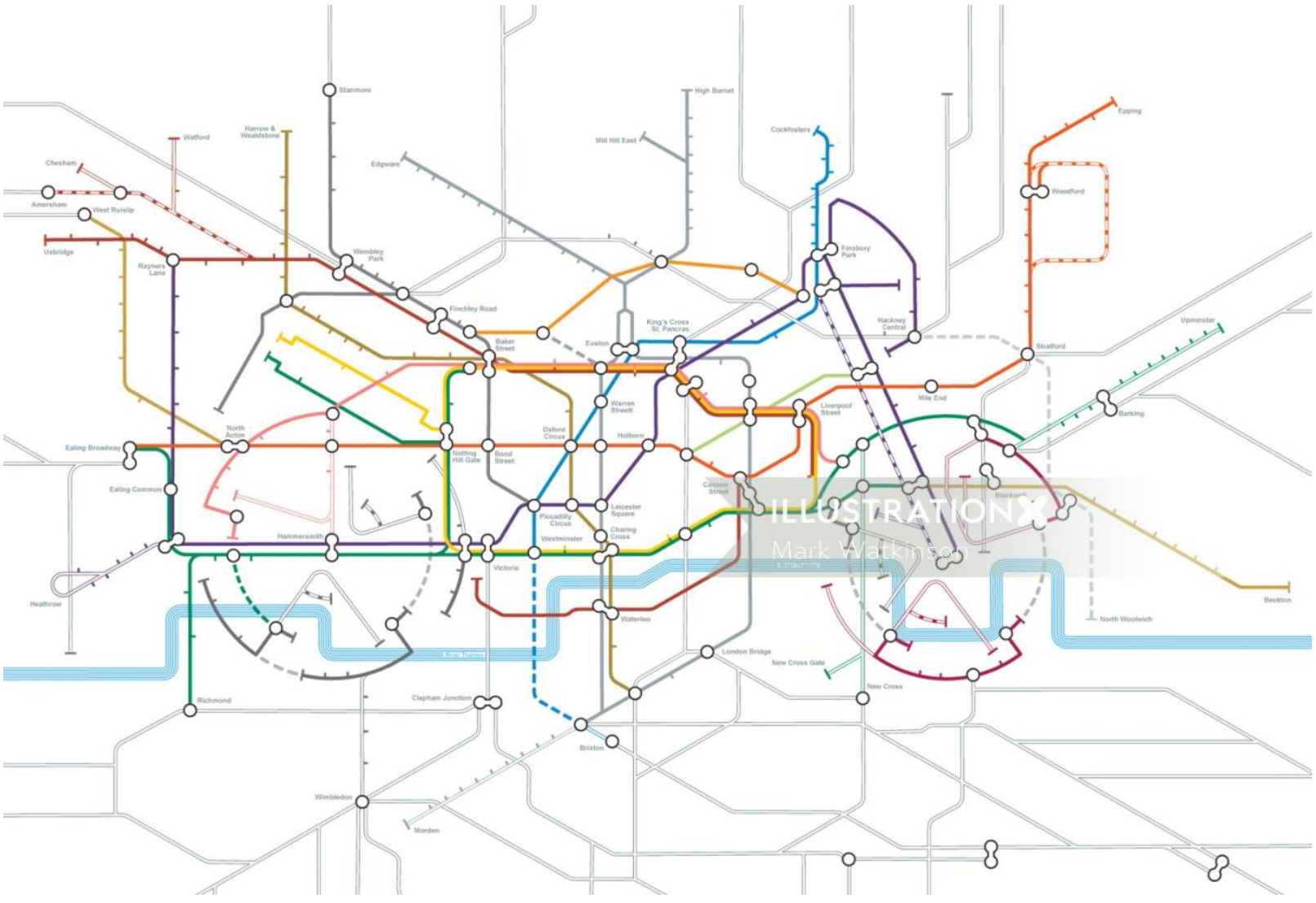

© All rights reserved

ILLUSTRATIONX
Connecting You to a World of Illustration

Mark Watkinson

www.illustrationx.com/sg/**MarkWatkinson**

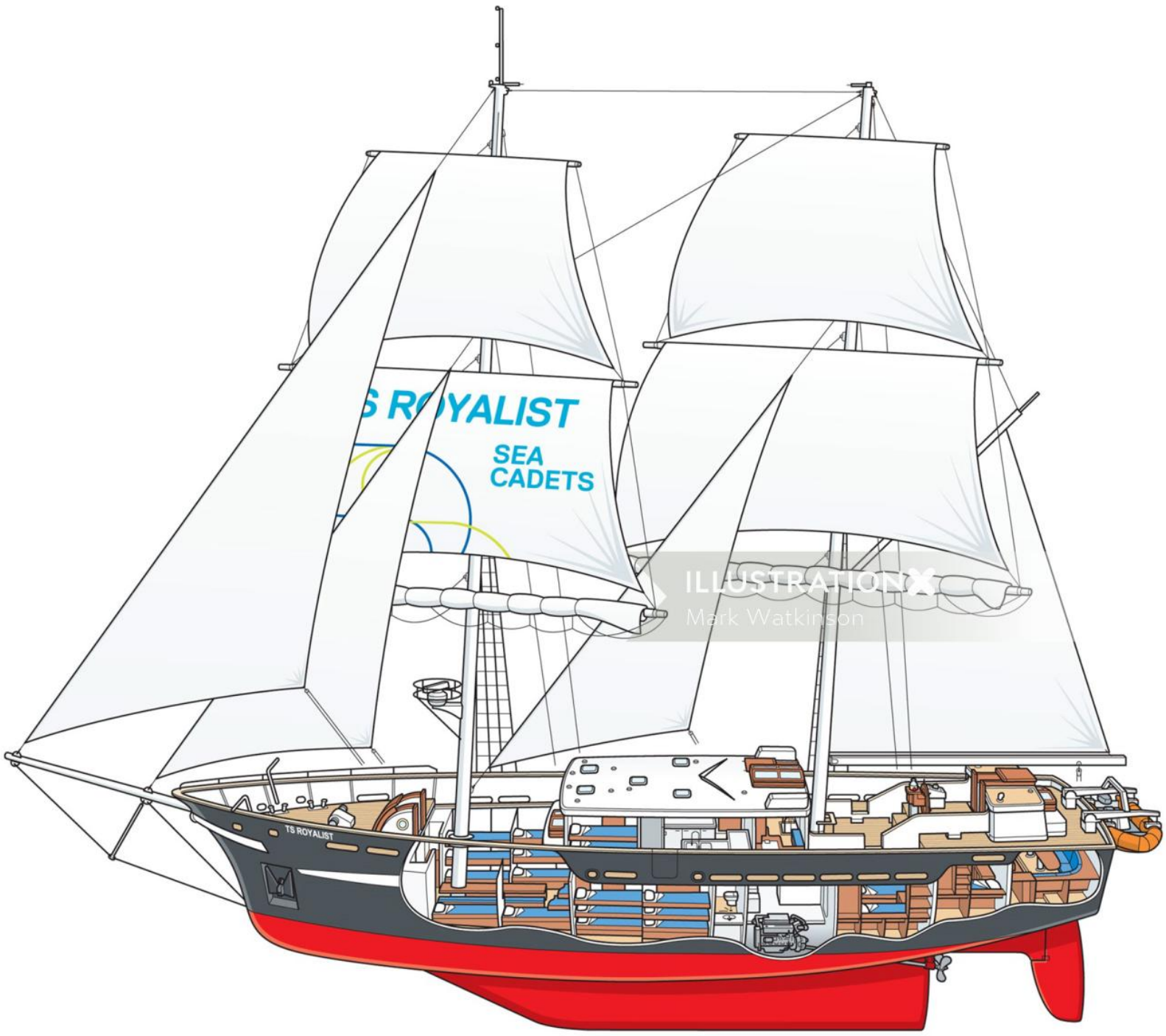

© All rights reserved

ILLUSTRATIONX
Connecting You to a World of Illustration

Mark Watkinson

www.illustrationx.com/sg/**MarkWatkinson**

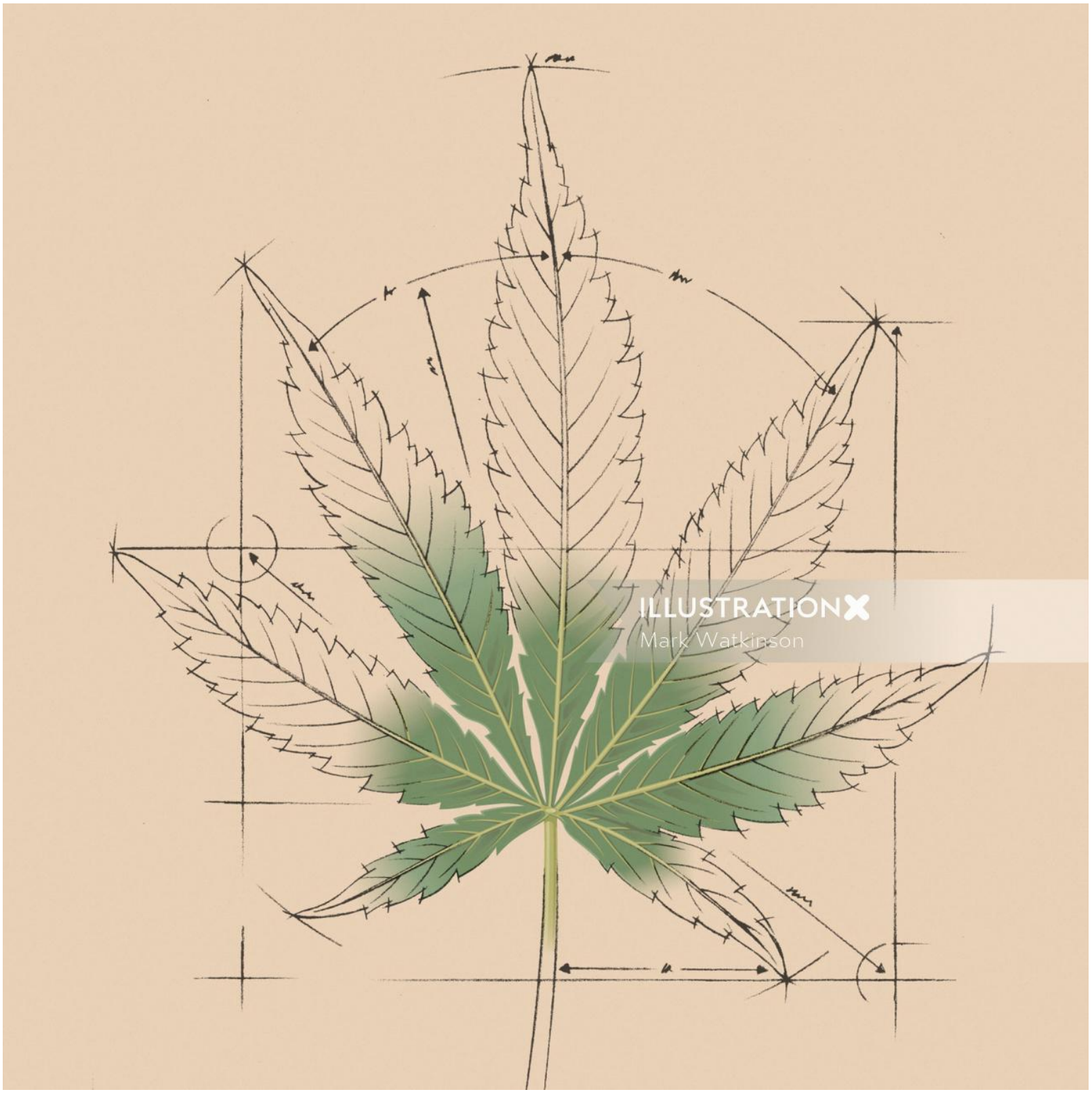

© All rights reserved

ILLUSTRATION
Connecting You to a World of Illustration

Mark Watkinson

www.illustrationx.com/sg/**MarkWatkinson**

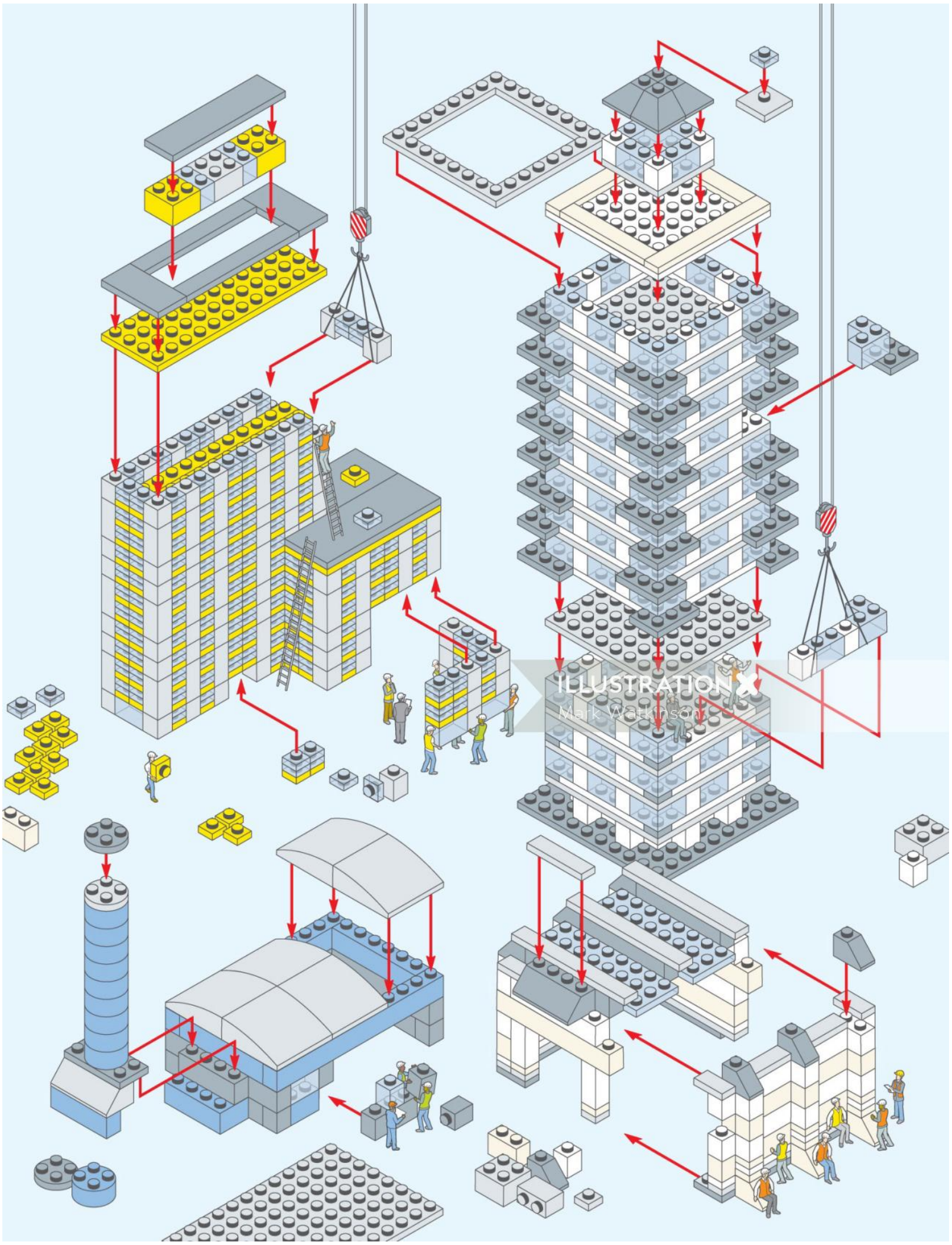

© All rights reserved

ILLUSTRATION X
Connecting You to a World of Illustration

Mark Watkinson

www.illustrationx.com/sg/**MarkWatkinson**

© All rights reserved

ILLUSTRATIONX
Connecting You to a World of Illustration

Mark Watkinson

www.illustrationx.com/sg/**MarkWatkinson**

© All rights reserved

ILLUSTRATIONX
Connecting You to a World of Illustration

Mark Watkinson

www.illustrationx.com/sg/**MarkWatkinson**

© All rights reserved

ILLUSTRATIONX
Connecting You to a World of Illustration

Mark Watkinson

www.illustrationx.com/sg/**MarkWatkinson**

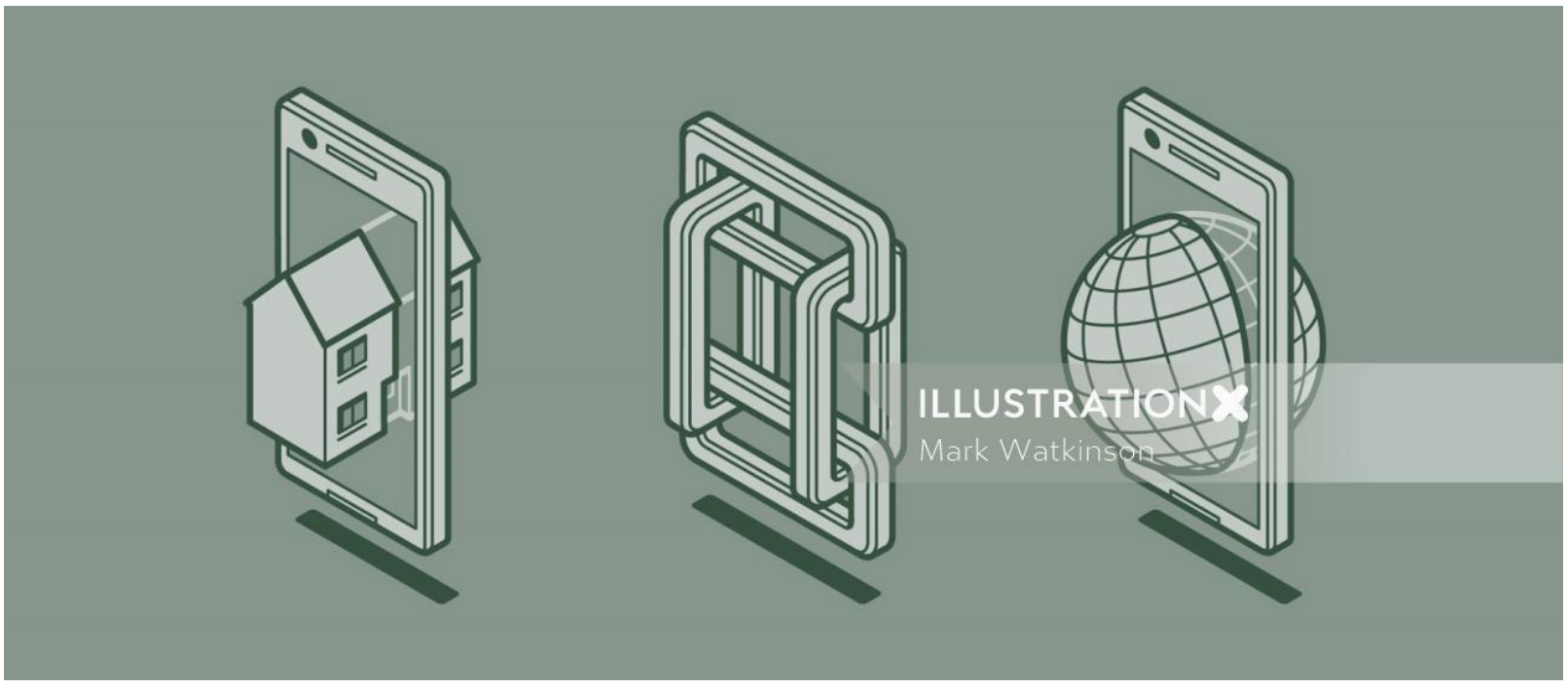

© All rights reserved

ILLUSTRATIONX
Connecting You to a World of Illustration

Mark Watkinson

www.illustrationx.com/sg/**MarkWatkinson**

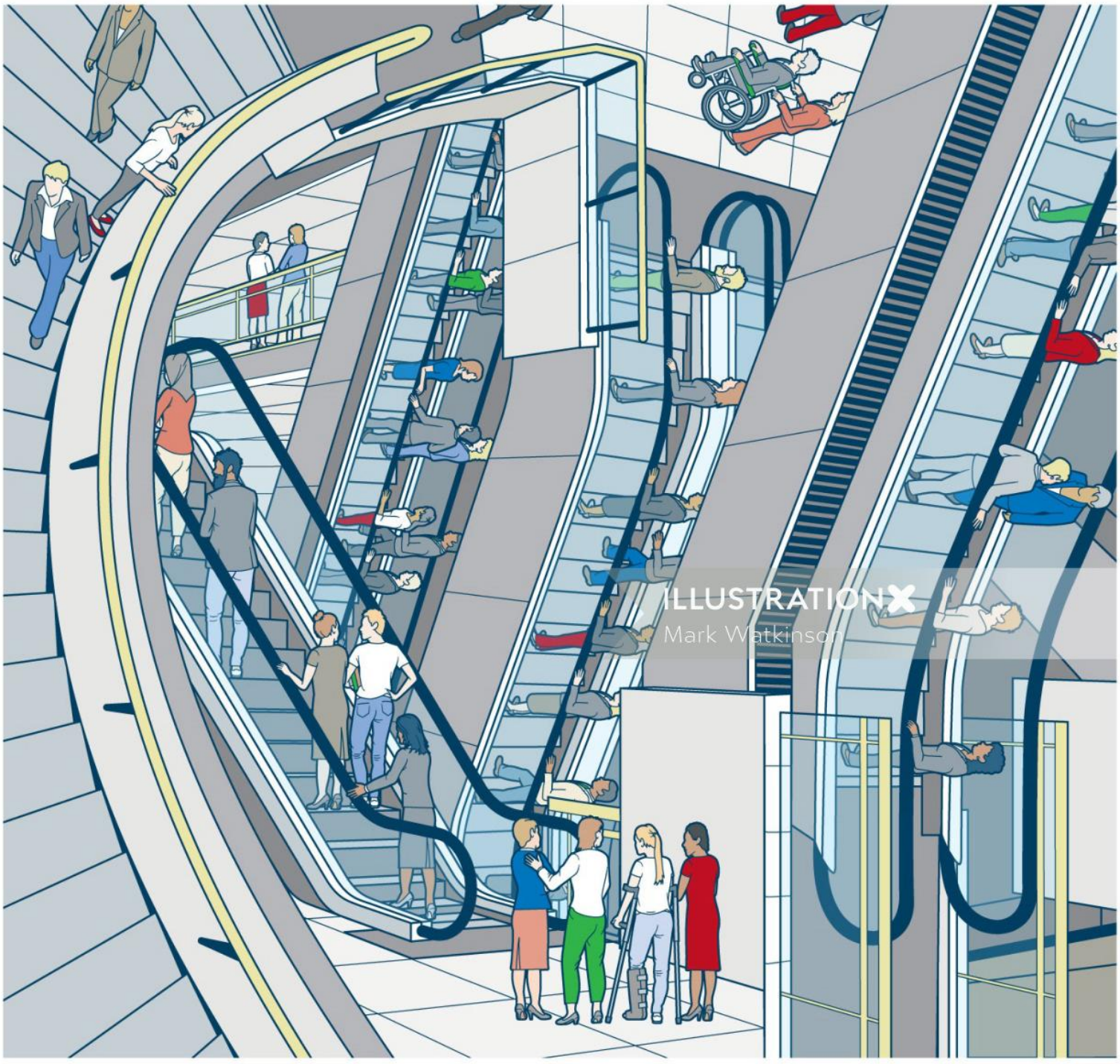

© All rights reserved

ILLUSTRATION
Connecting You to a World of Illustration

Mark Watkinson

www.illustrationx.com/sg/**MarkWatkinson**

© All rights reserved

ILLUSTRATIONX
Connecting You to a World of Illustration

Mark Watkinson

www.illustrationx.com/sg/**MarkWatkinson**

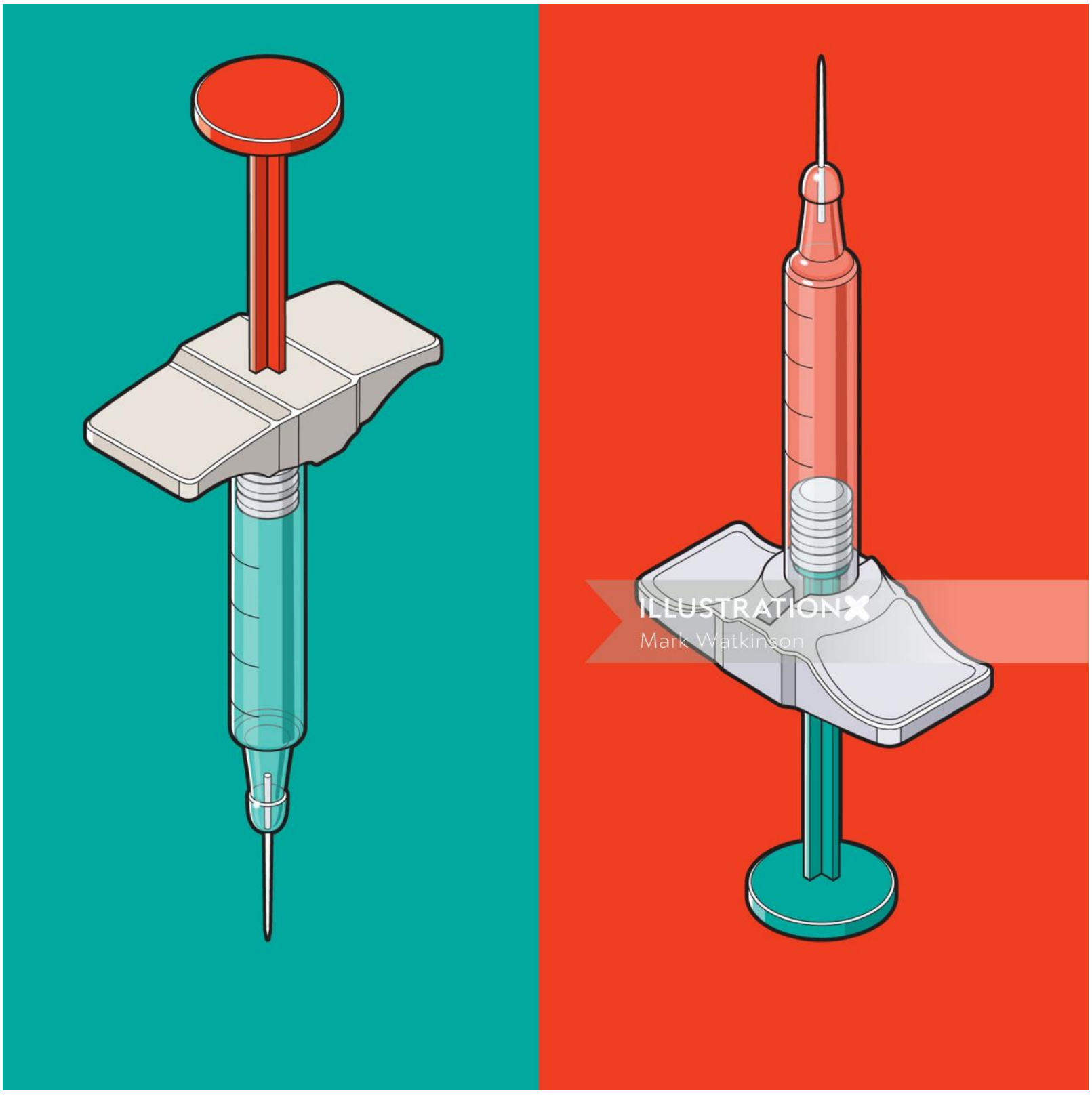

© All rights reserved

Mark Watkinson

www.illustrationx.com/sg/**MarkWatkinson**

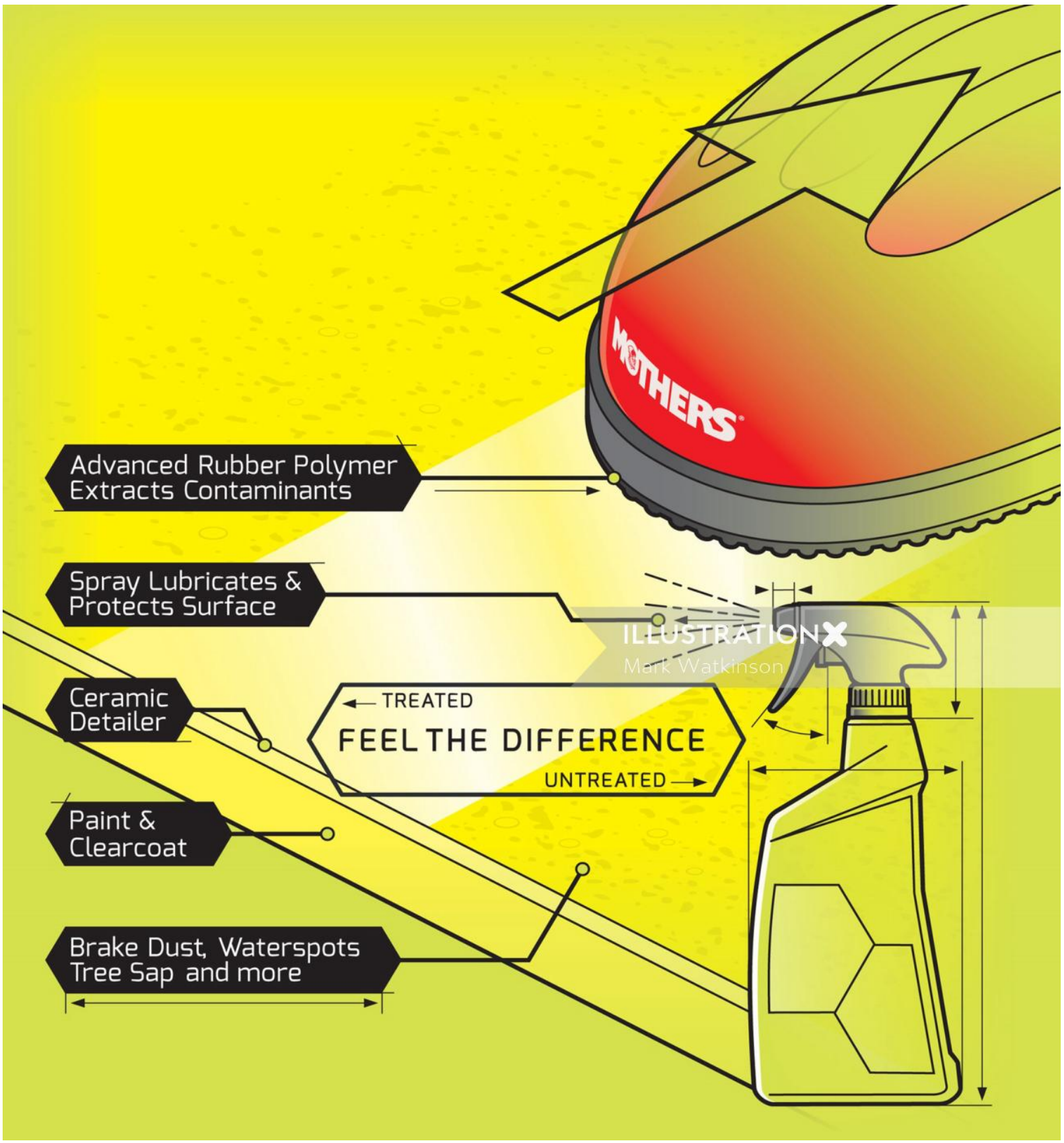

© All rights reserved

ILLUSTRATIONX
Connecting You to a World of Illustration

Mark Watkinson

www.illustrationx.com/sg/**MarkWatkinson**

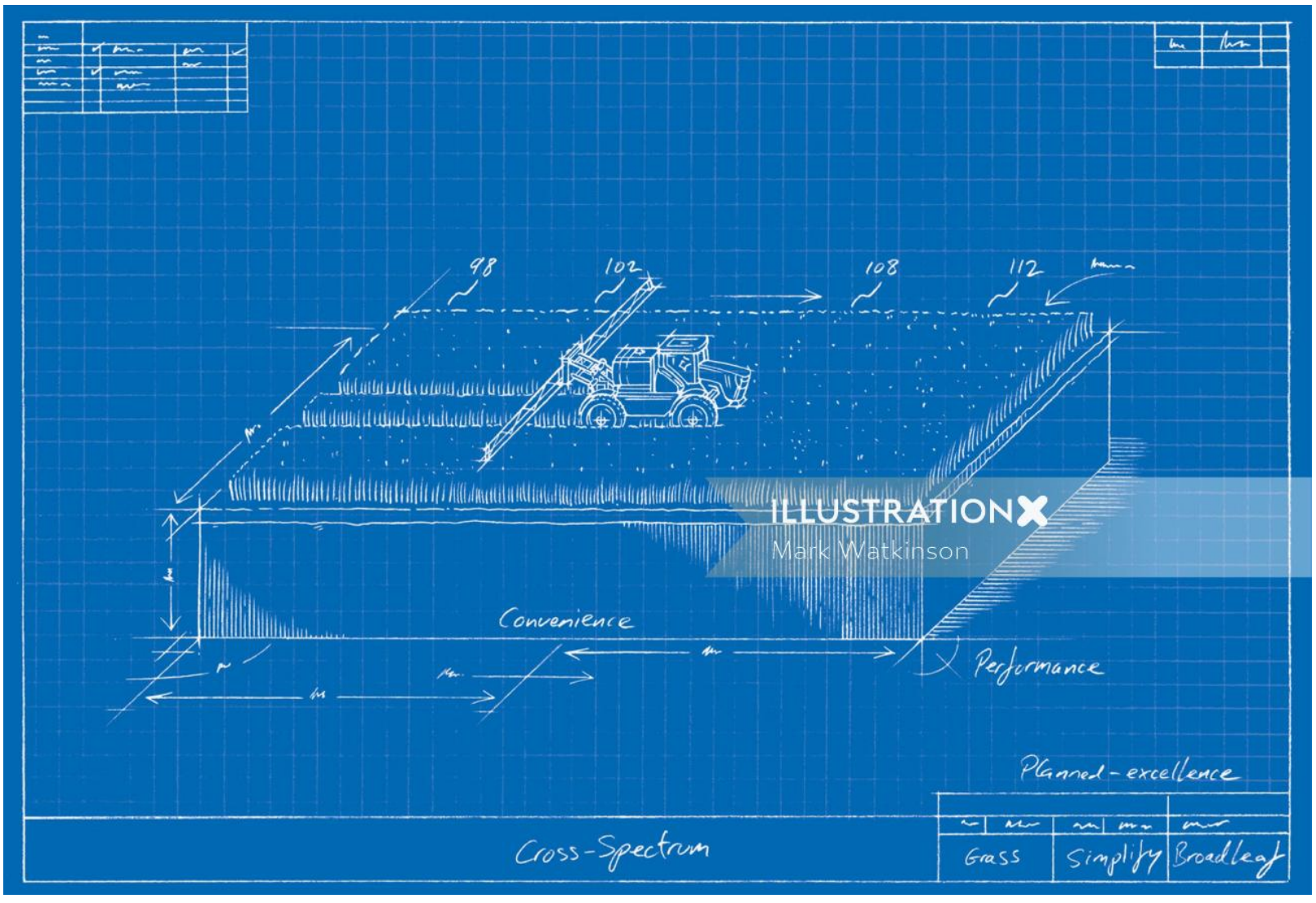

© All rights reserved

ILLUSTRATIONX
Connecting You to a World of Illustration

Mark Watkinson

www.illustrationx.com/sg/**MarkWatkinson**

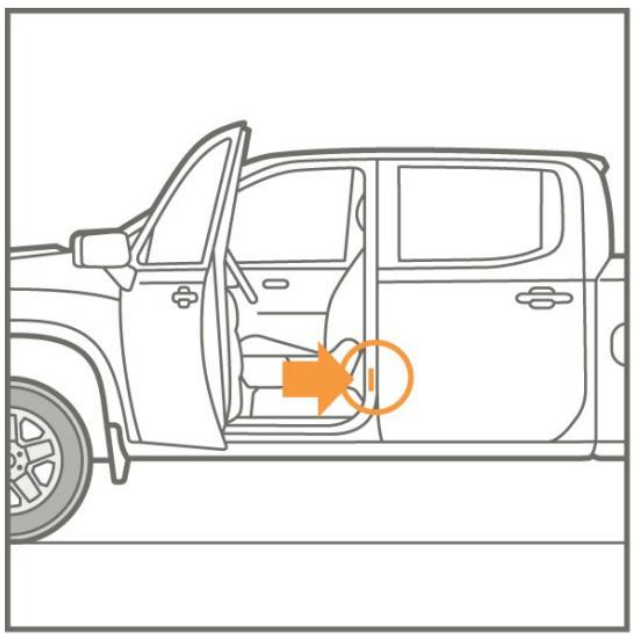

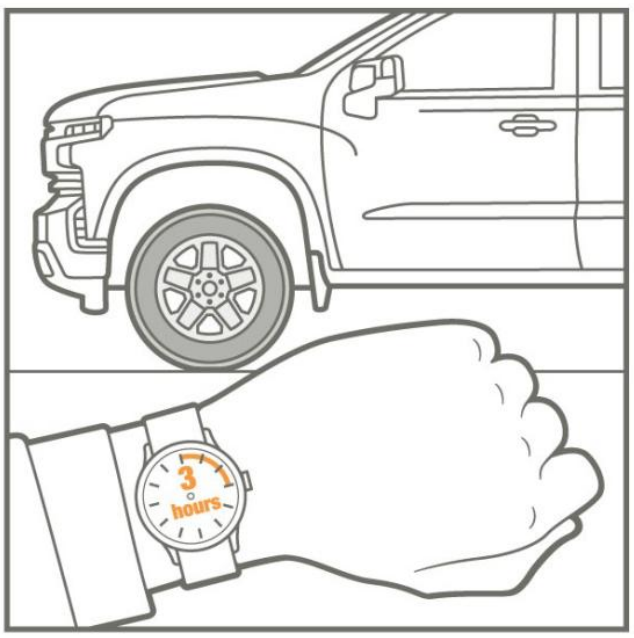

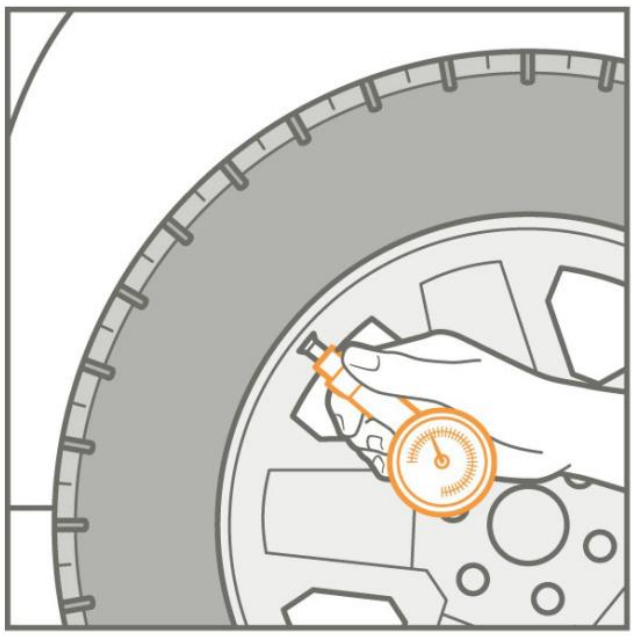

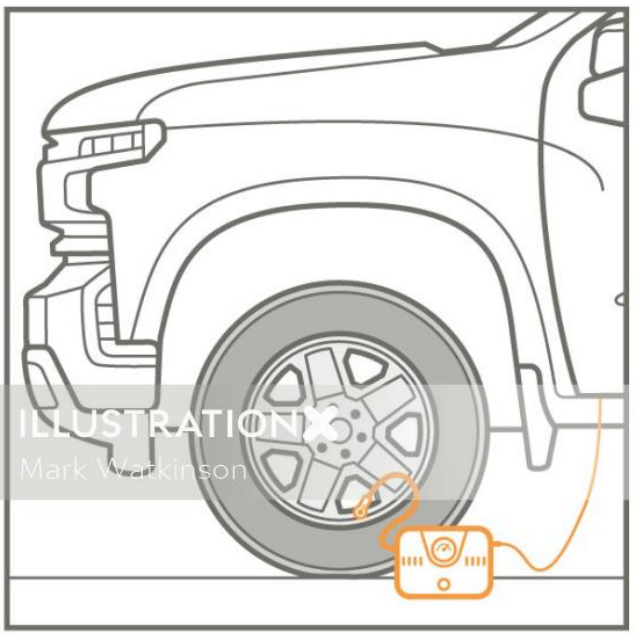

ILLUSTRATIONX
Mark Watkinson

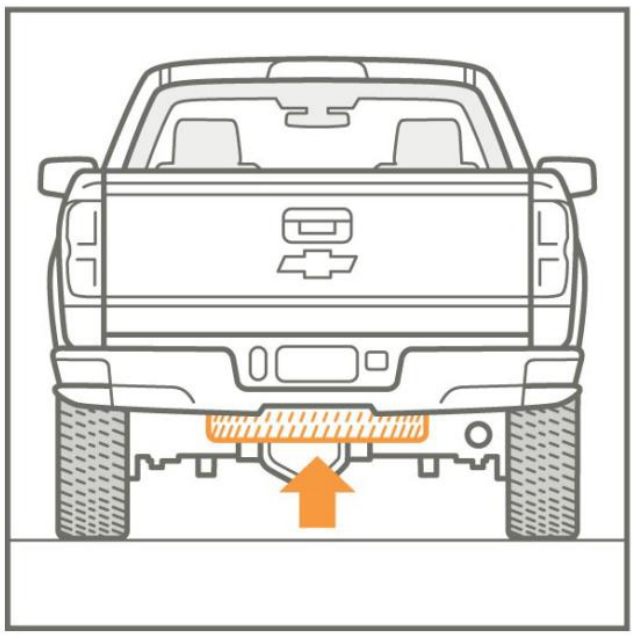

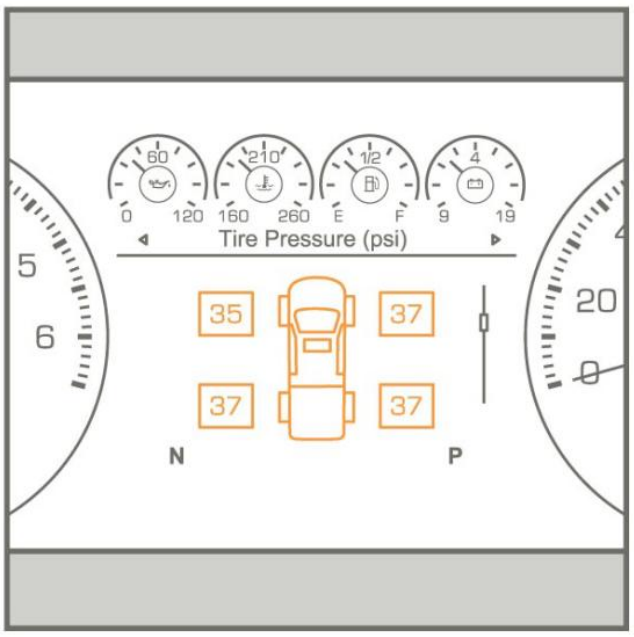

© All rights reserved

ILLUSTRATIONX
Connecting You to a World of Illustration

Mark Watkinson

www.illustrationx.com/sg/**MarkWatkinson**

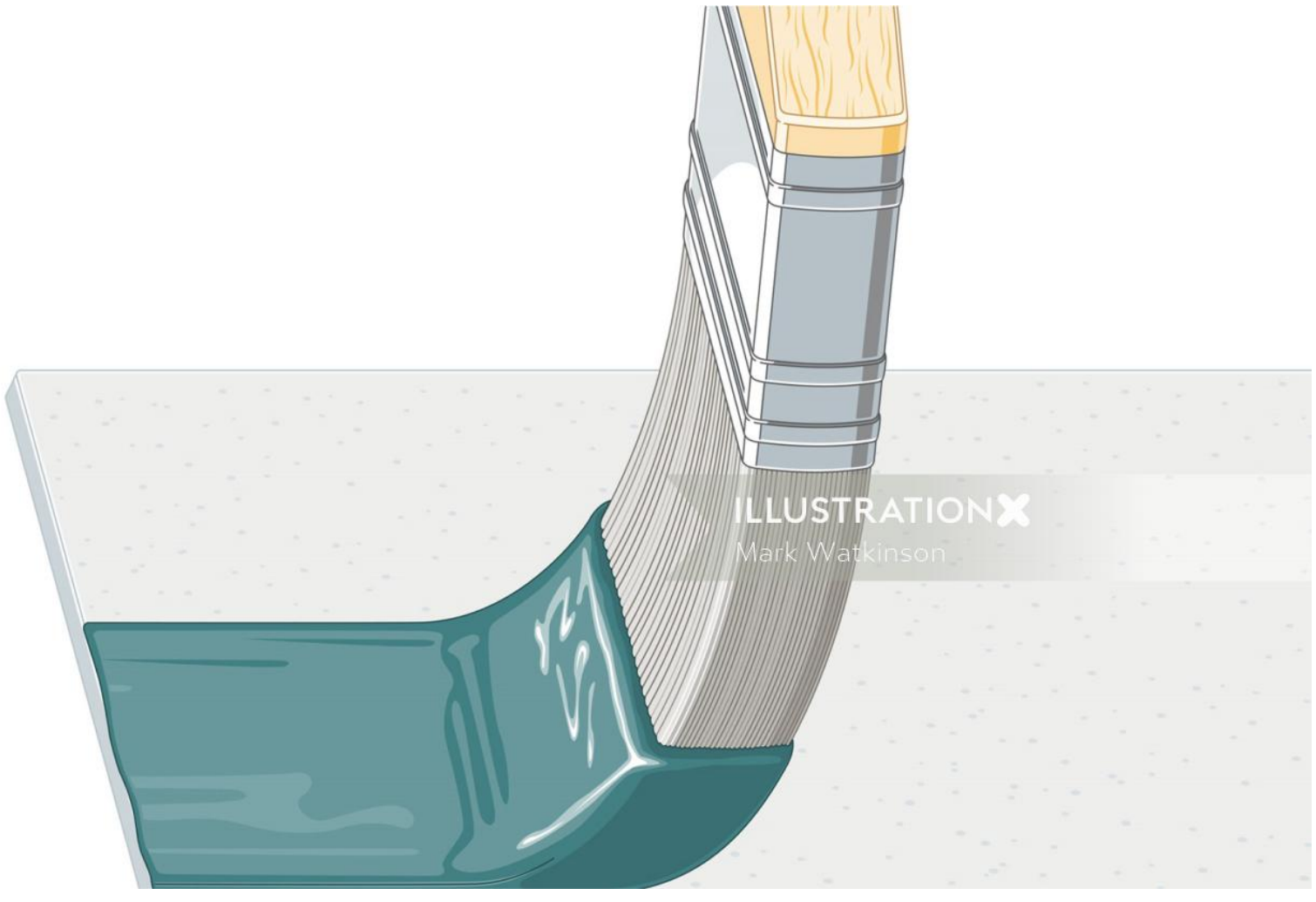

© All rights reserved

ILLUSTRATIONX
Connecting You to a World of Illustration

Mark Watkinson

www.illustrationx.com/sg/**MarkWatkinson**

© All rights reserved

ILLUSTRATIONX
Connecting You to a World of Illustration

Mark Watkinson

www.illustrationx.com/sg/**MarkWatkinson**

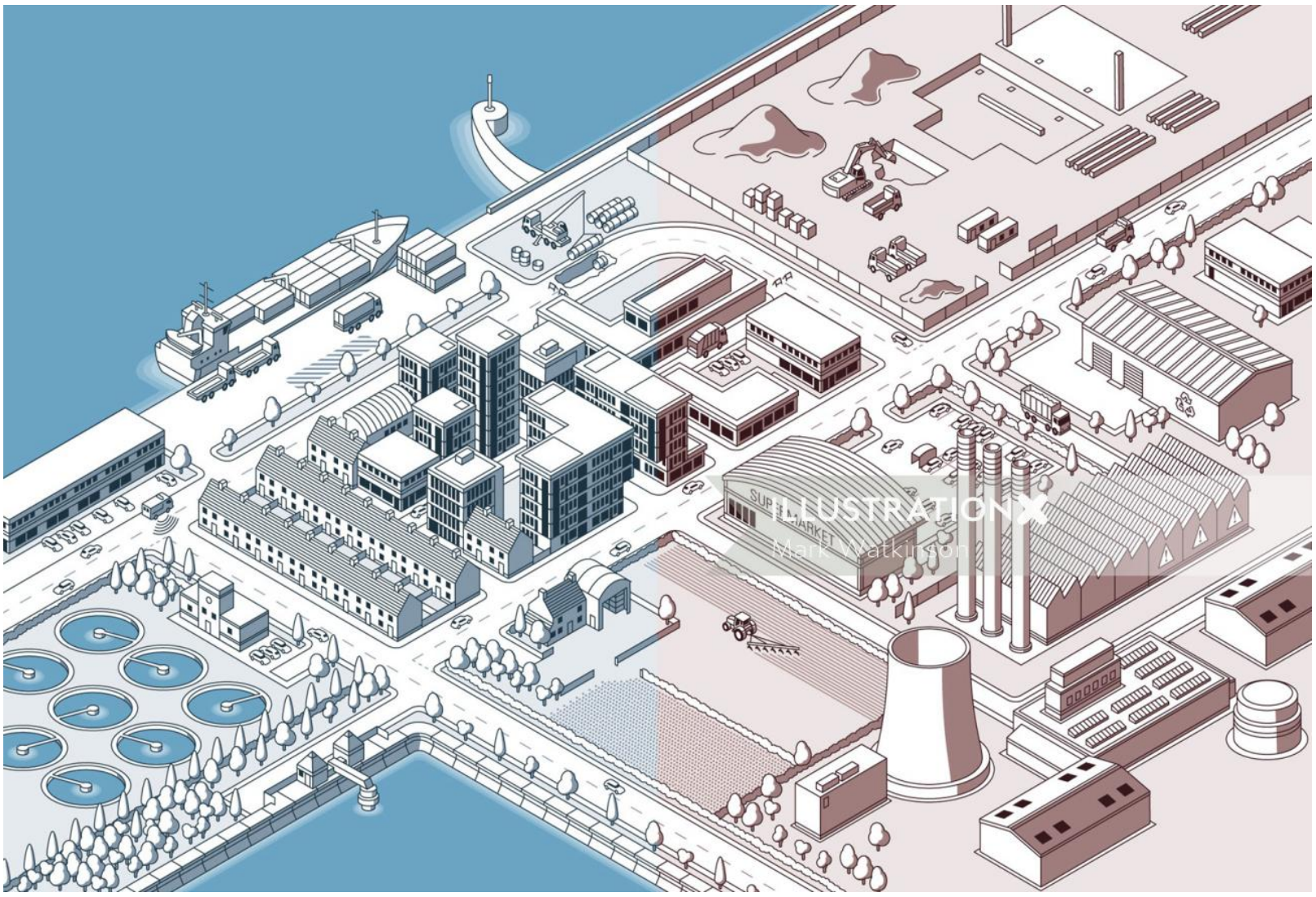

© All rights reserved

ILLUSTRATIONX
Connecting You to a World of Illustration

Mark Watkinson

www.illustrationx.com/sg/**MarkWatkinson**

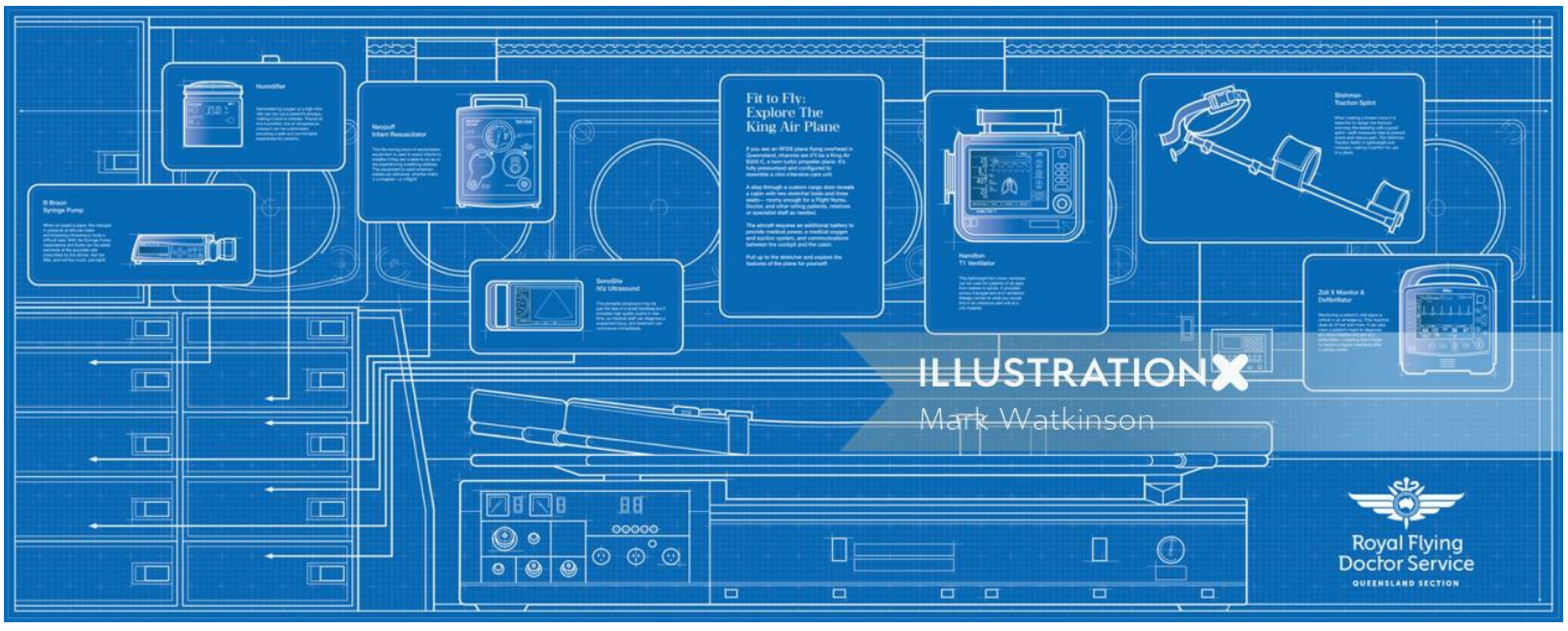

© All rights reserved

ILLUSTRATIONX
Connecting You to a World of Illustration

Mark Watkinson

www.illustrationx.com/sg/**MarkWatkinson**

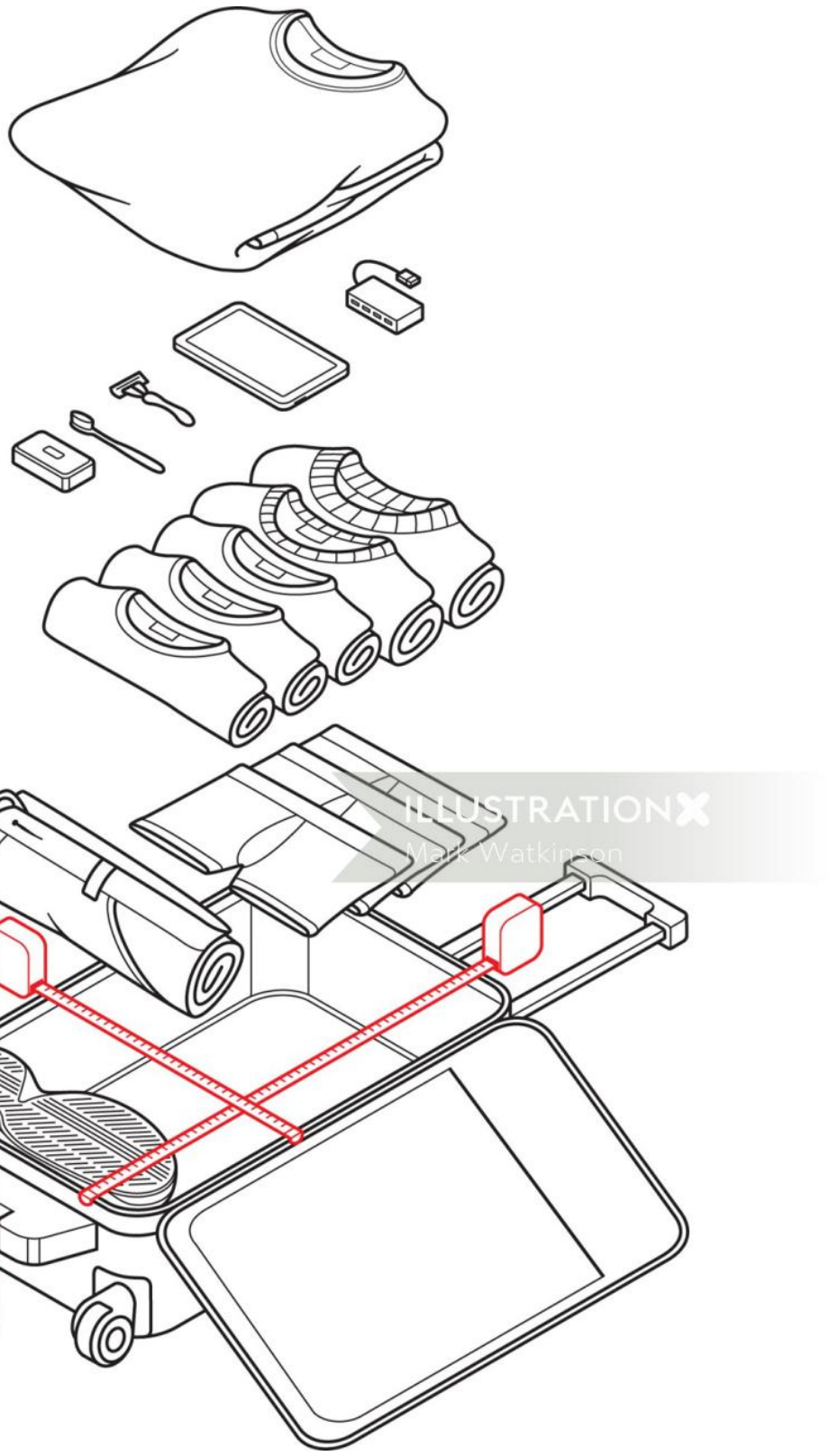

© All rights reserved

ILLUSTRATIONX
Connecting You to a World of Illustration

Mark Watkinson

www.illustrationx.com/sg/**MarkWatkinson**

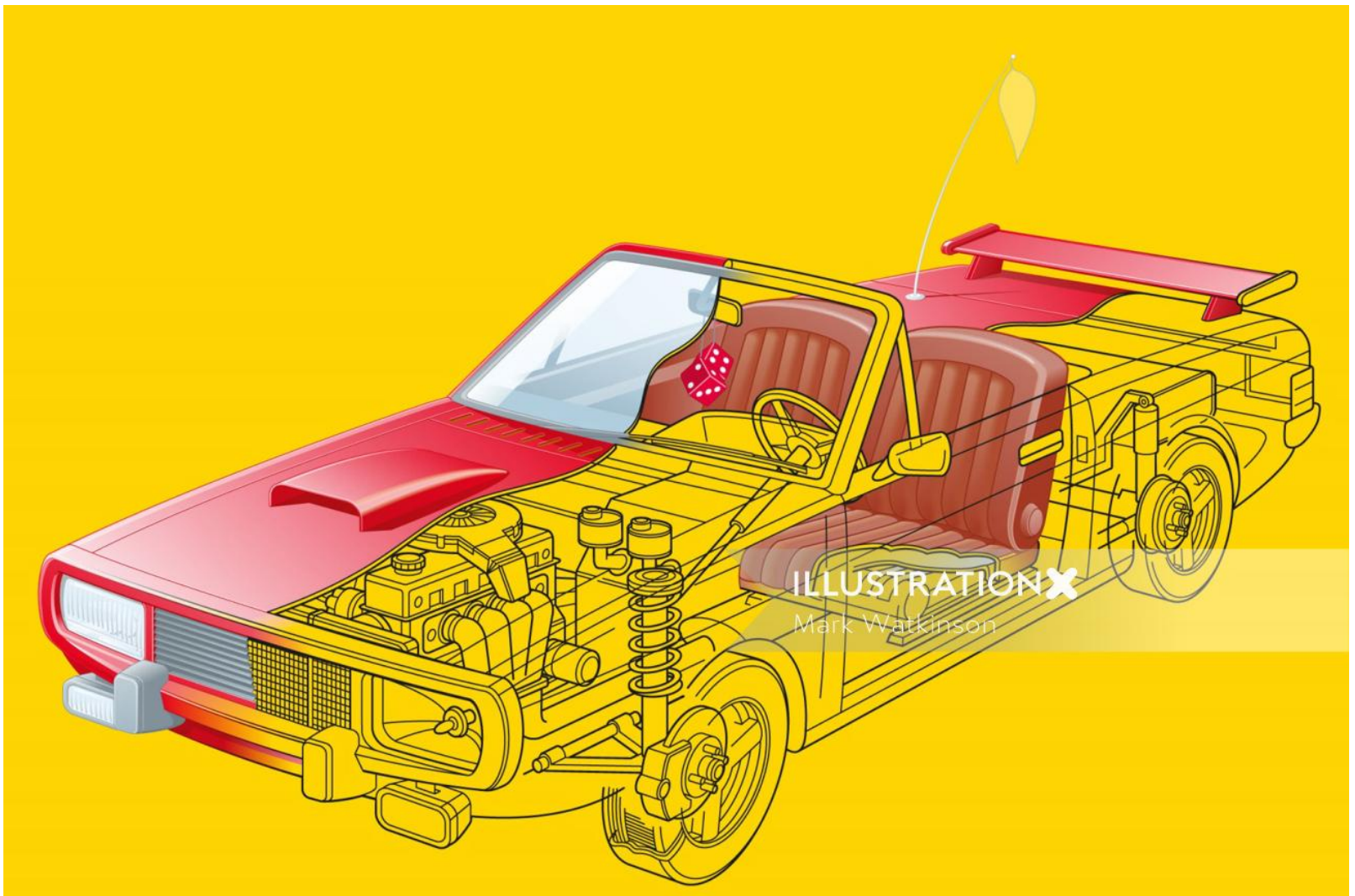

© All rights reserved

ILLUSTRATIONX
Connecting You to a World of Illustration

Mark Watkinson

www.illustrationx.com/sg/**MarkWatkinson**

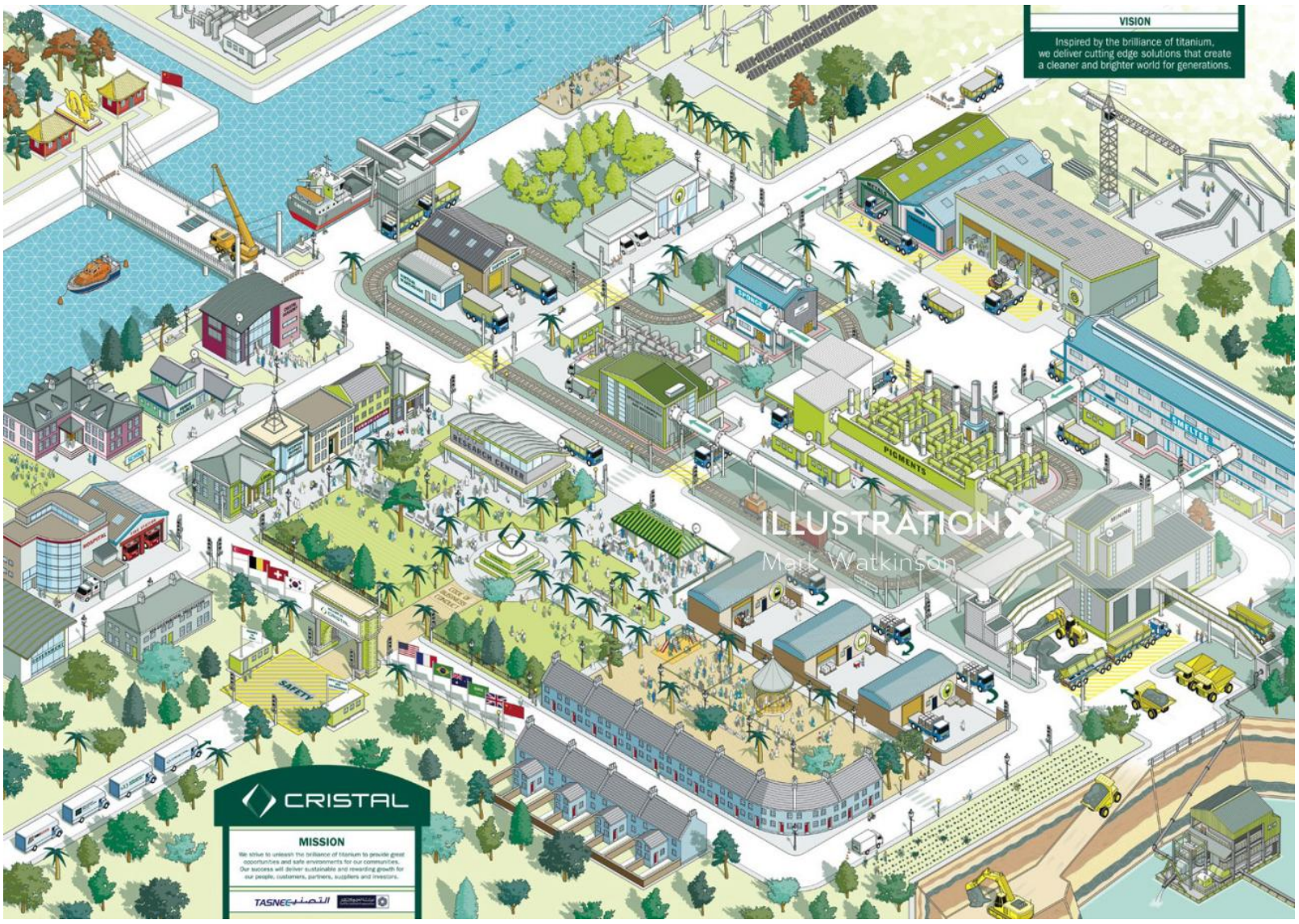

© All rights reserved

ILLUSTRATIONX
Connecting You to a World of Illustration

Mark Watkinson

www.illustrationx.com/sg/**MarkWatkinson**

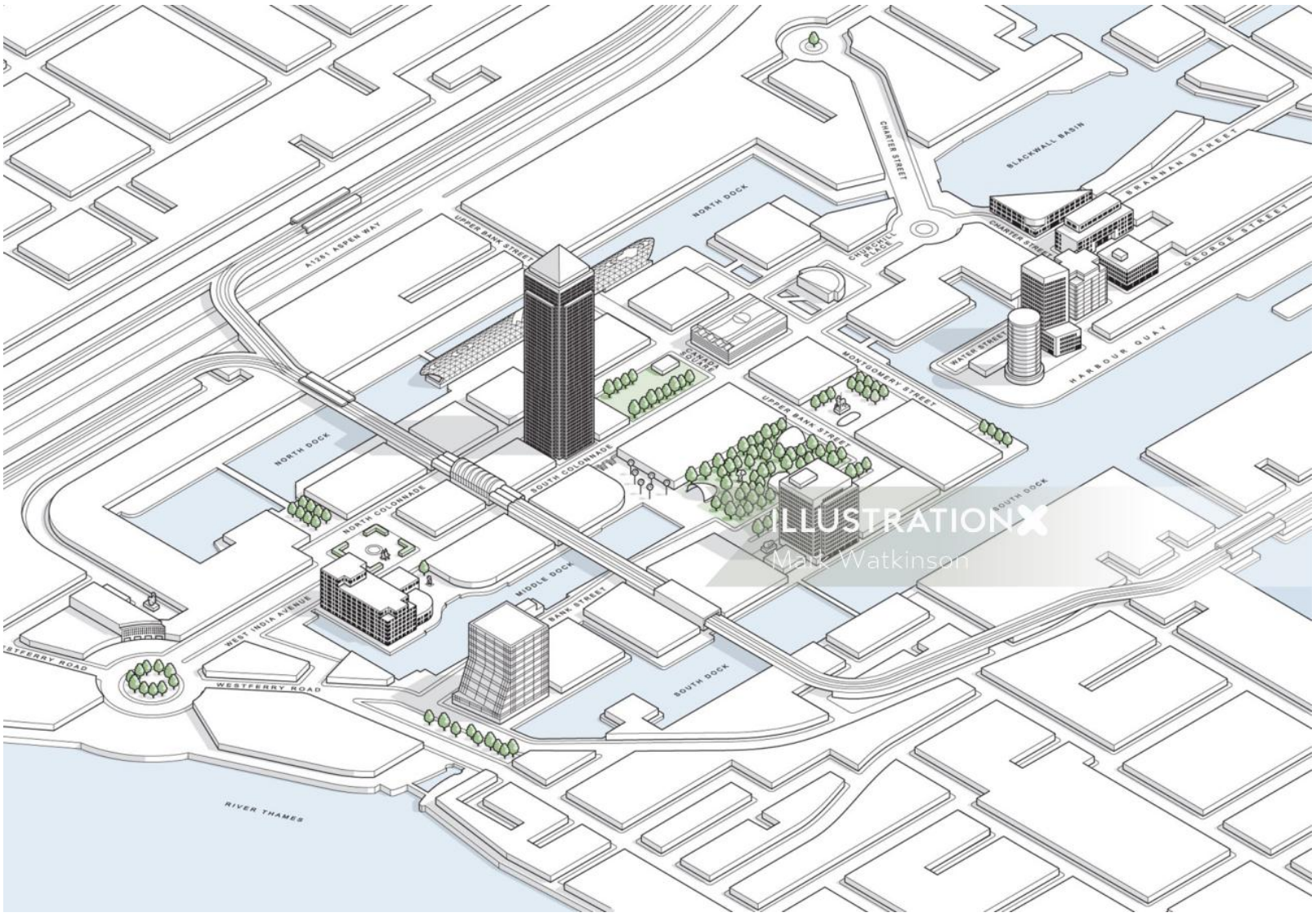

© All rights reserved

ILLUSTRATIONX
Connecting You to a World of Illustration

Mark Watkinson

www.illustrationx.com/sg/**MarkWatkinson**

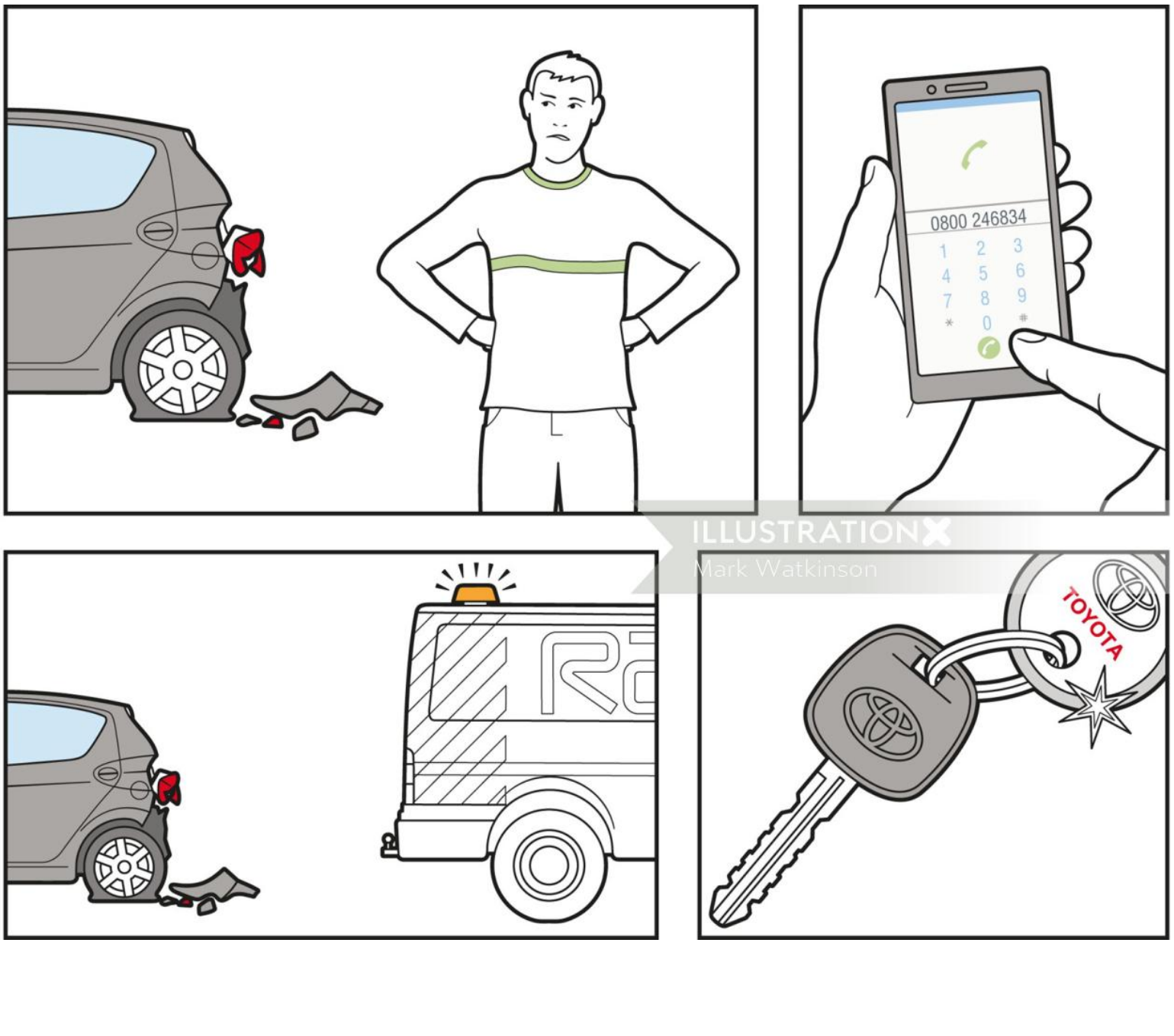

ILLUSTRATIONX
Mark Watkinson

© All rights reserved

ILLUSTRATIONX
Connecting You to a World of Illustration

Mark Watkinson

www.illustrationx.com/sg/**MarkWatkinson**

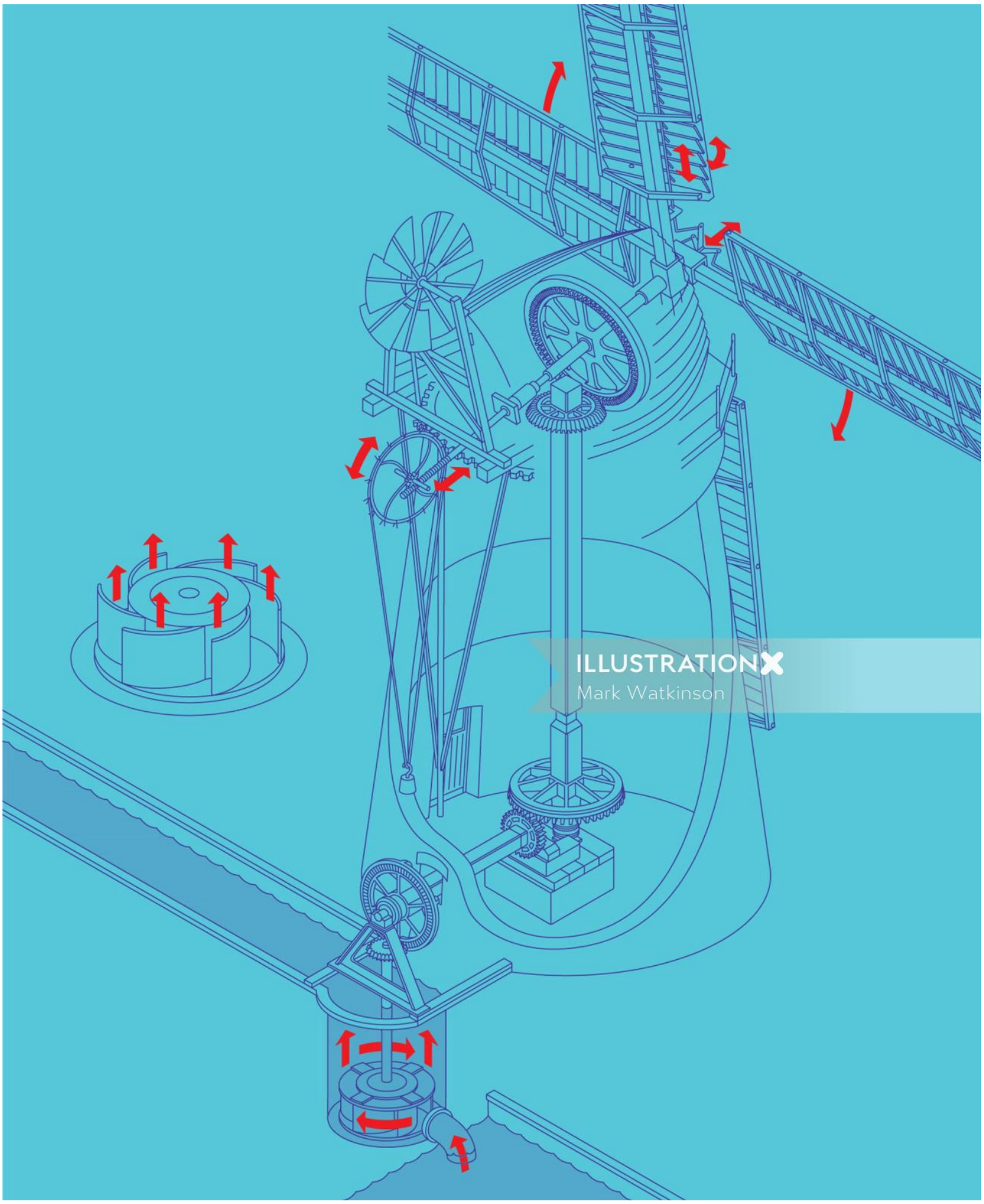

© All rights reserved

Mark Watkinson

www.illustrationx.com/sg/**MarkWatkinson**

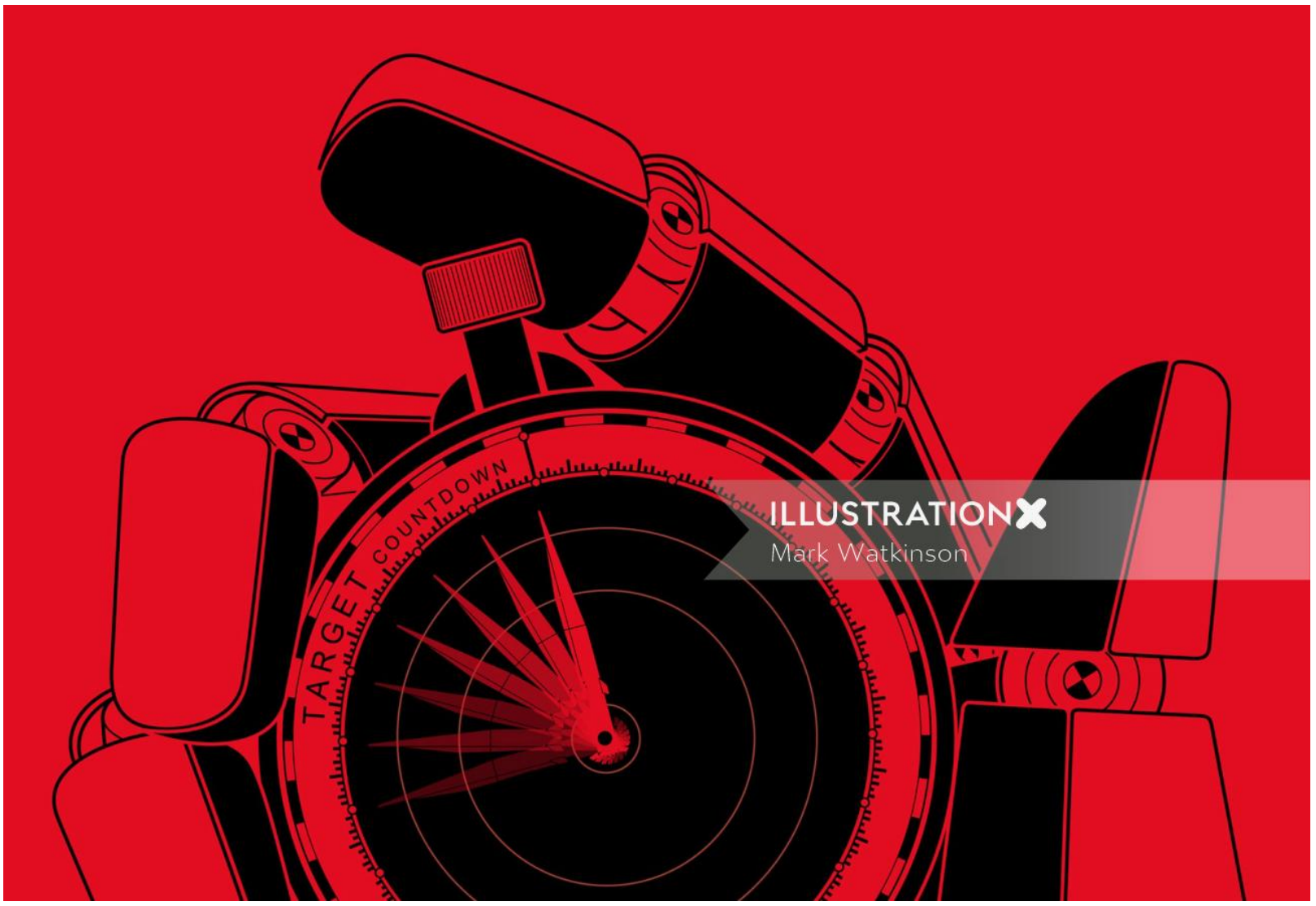

© All rights reserved

ILLUSTRATIONX
Connecting You to a World of Illustration

Mark Watkinson

www.illustrationx.com/sg/**MarkWatkinson**

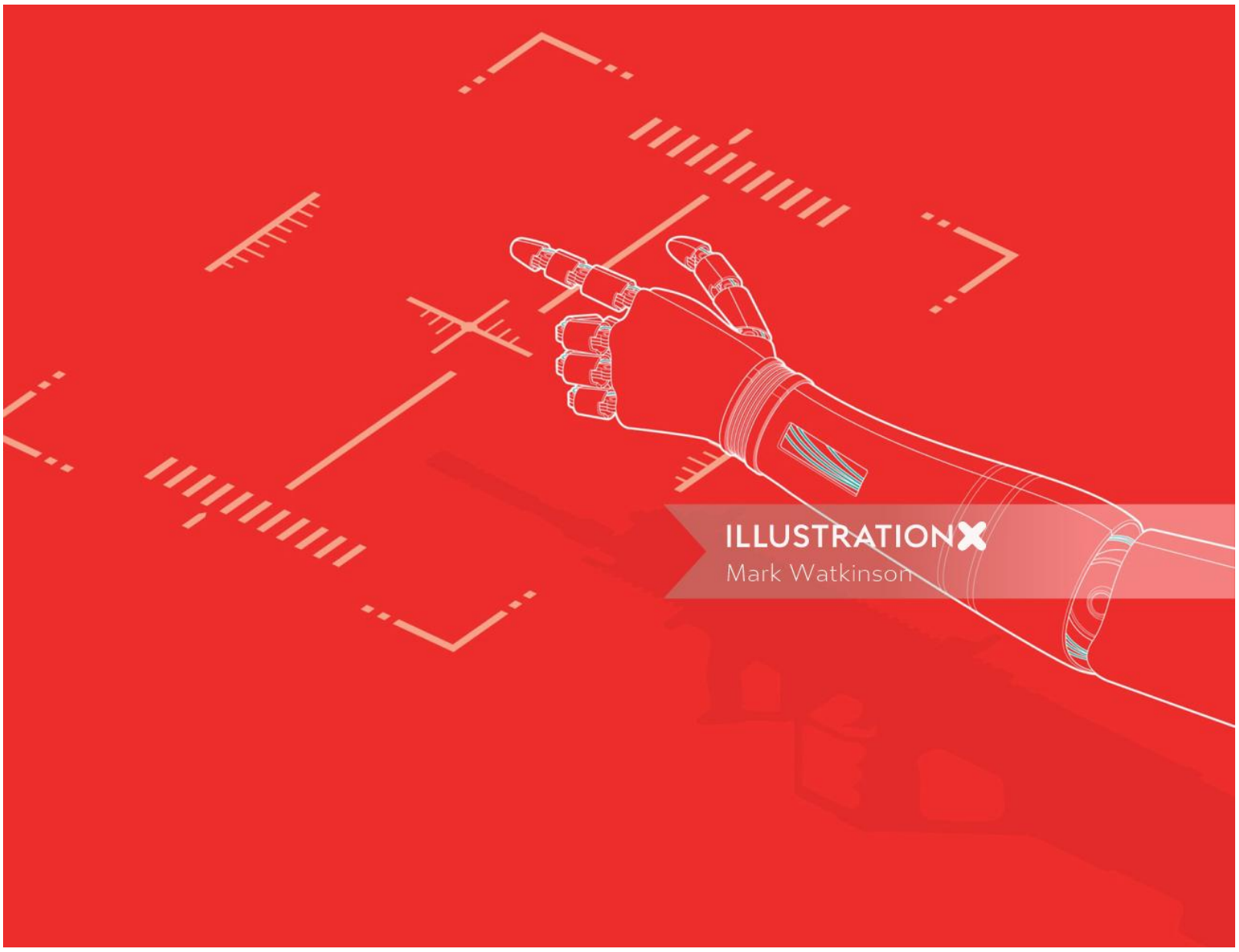

© All rights reserved

ILLUSTRATIONX
Connecting You to a World of Illustration

Mark Watkinson

www.illustrationx.com/sg/**MarkWatkinson**

© All rights reserved

ILLUSTRATIONX
Connecting You to a World of Illustration

Mark Watkinson

www.illustrationx.com/sg/**MarkWatkinson**

© All rights reserved

ILLUSTRATIONX
Connecting You to a World of Illustration

Mark Watkinson

www.illustrationx.com/sg/**MarkWatkinson**

© All rights reserved

ILLUSTRATIONX
Connecting You to a World of Illustration

Mark Watkinson

www.illustrationx.com/sg/**MarkWatkinson**

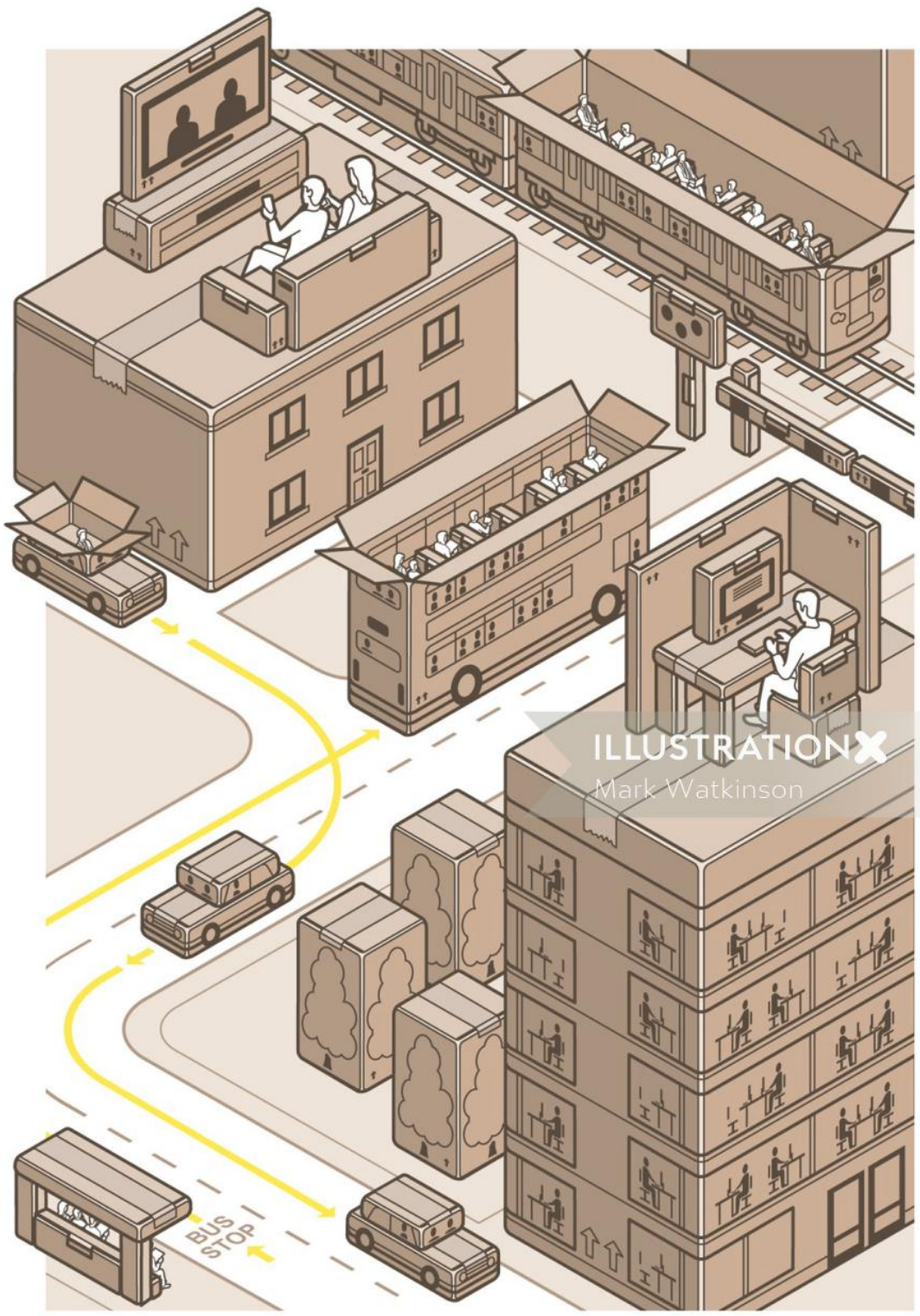

© All rights reserved

ILLUSTRATION
Connecting You to a World of Illustration

Mark Watkinson

www.illustrationx.com/sg/**MarkWatkinson**

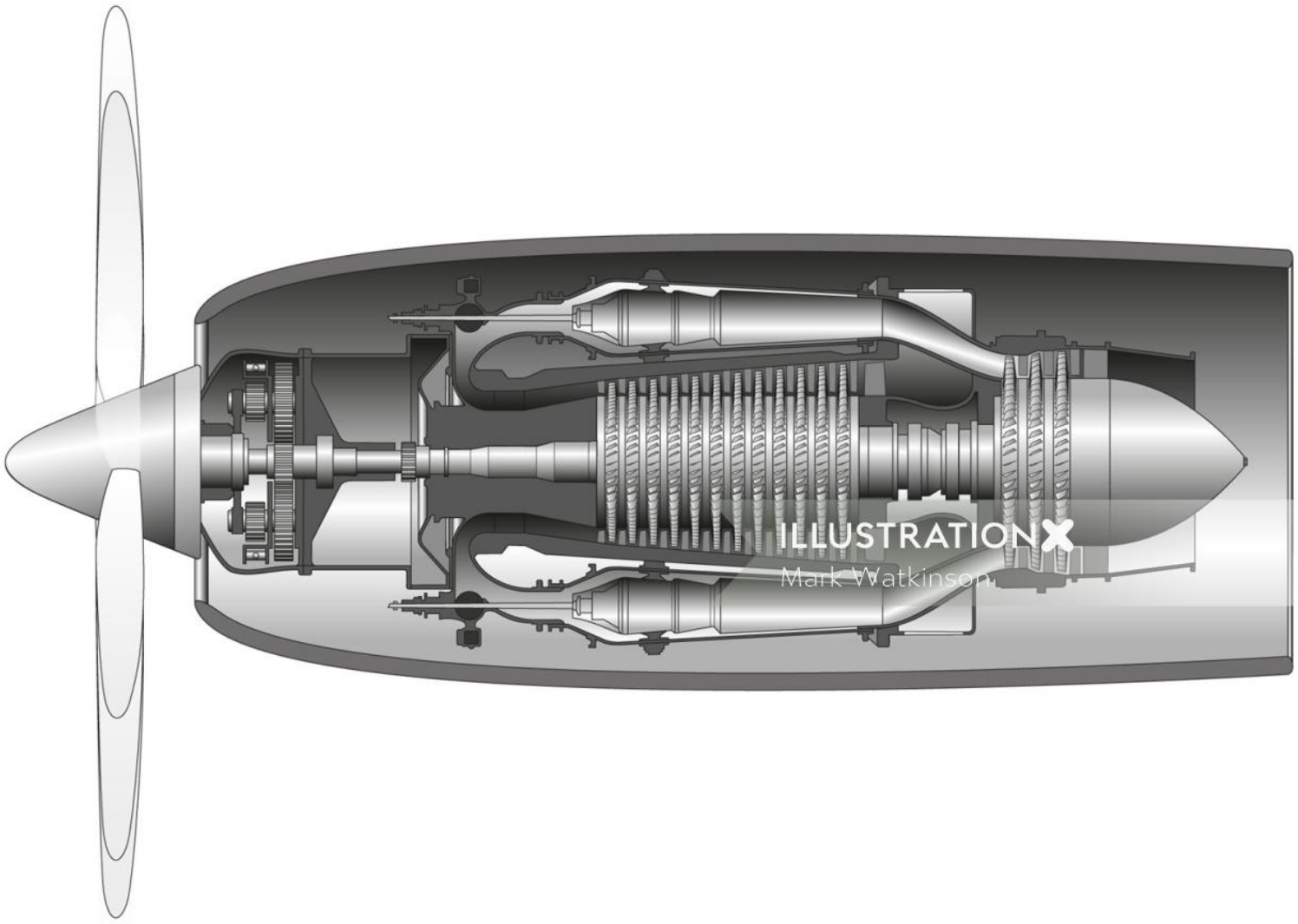

© All rights reserved

ILLUSTRATIONX
Connecting You to a World of Illustration

Mark Watkinson

www.illustrationx.com/sg/**MarkWatkinson**

© All rights reserved

ILLUSTRATIONX
Connecting You to a World of Illustration

Mark Watkinson

www.illustrationx.com/sg/**MarkWatkinson**

© All rights reserved

ILLUSTRATIONX
Connecting You to a World of Illustration

Mark Watkinson

www.illustrationx.com/sg/**MarkWatkinson**

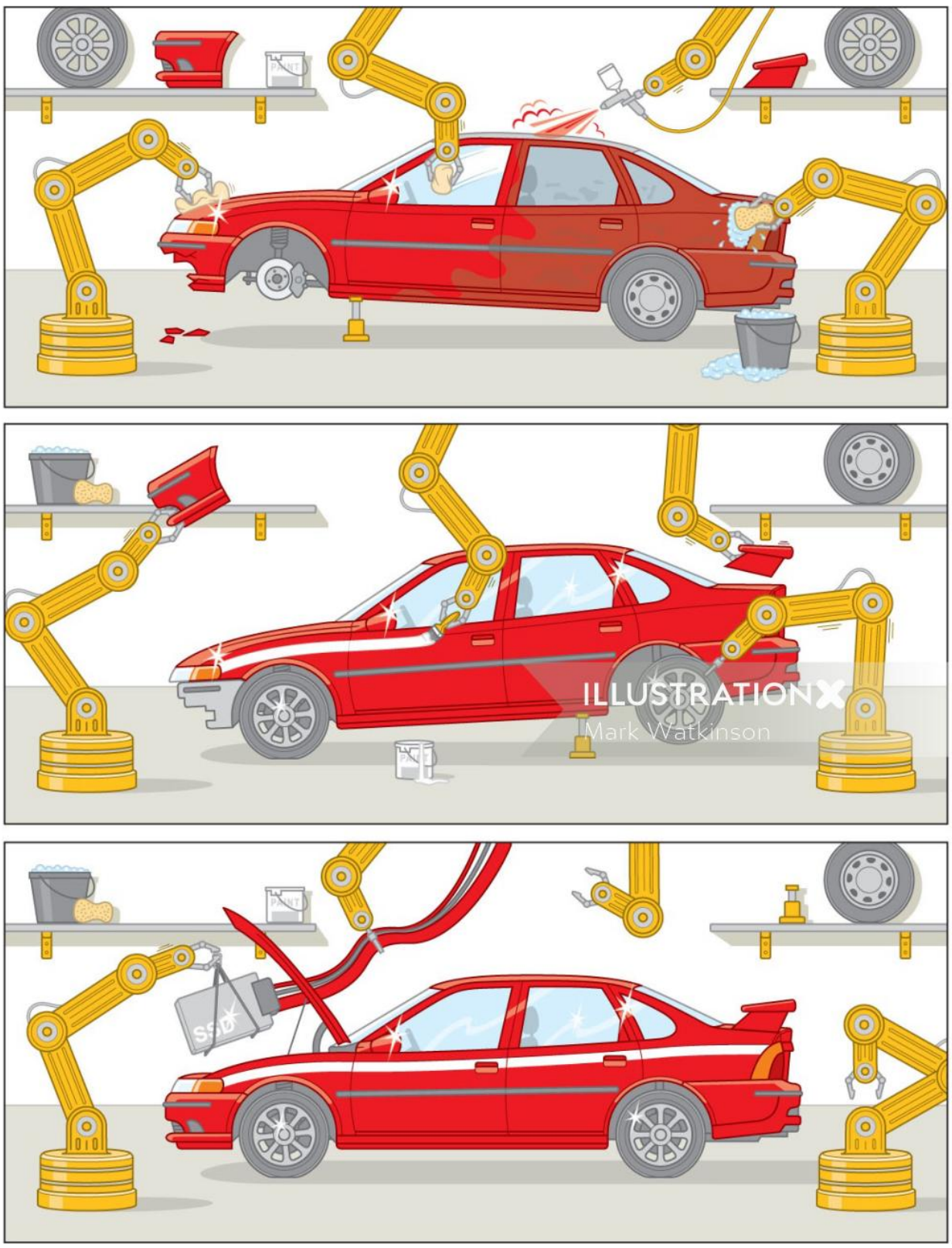

© All rights reserved

ILLUSTRATIONX
Connecting You to a World of Illustration

Mark Watkinson

www.illustrationx.com/sg/**MarkWatkinson**

© All rights reserved

ILLUSTRATIONX
Connecting You to a World of Illustration

Mark Watkinson

www.illustrationx.com/sg/**MarkWatkinson**

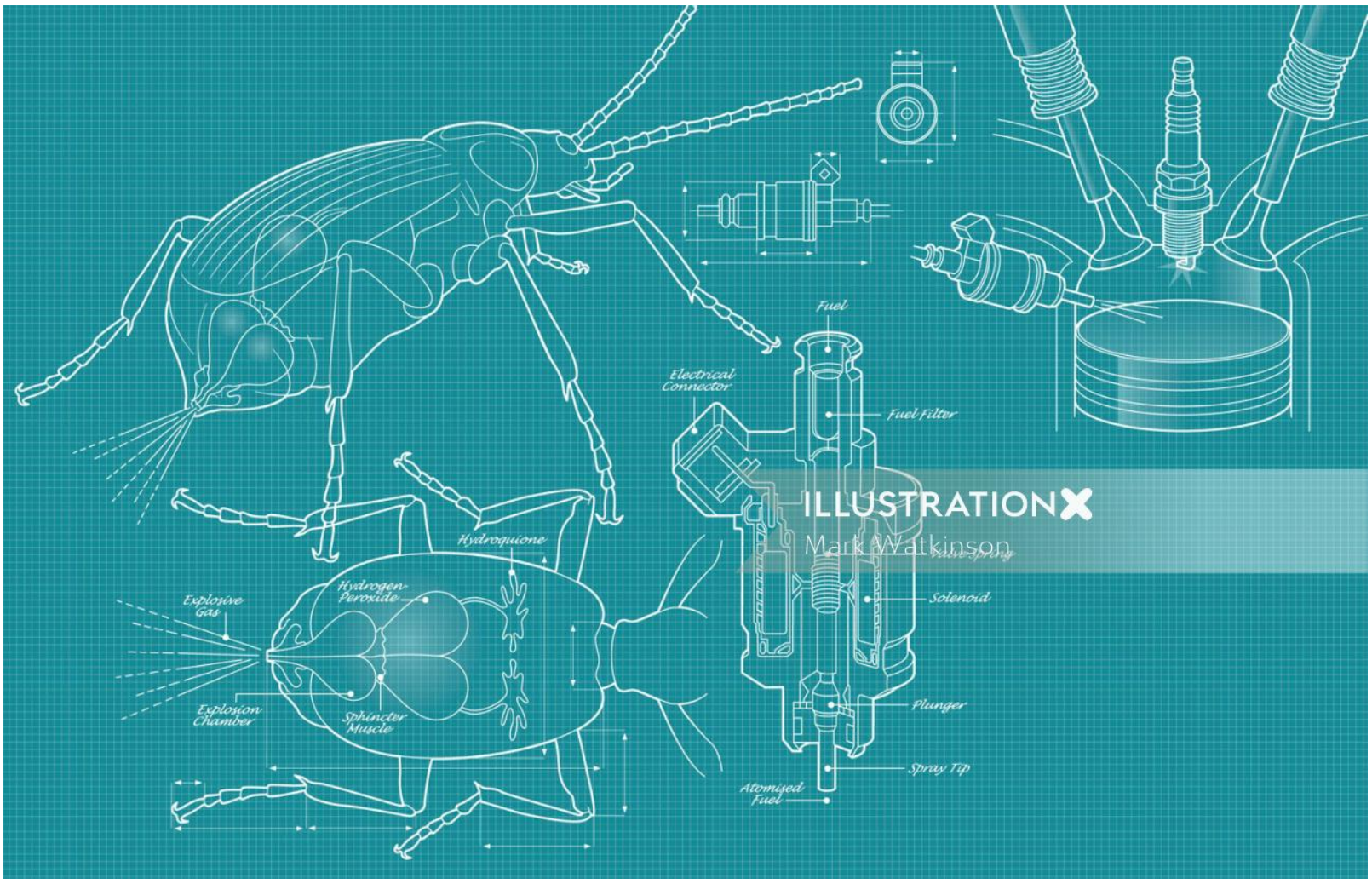

© All rights reserved

ILLUSTRATION
Connecting You to a World of Illustration

Mark Watkinson

www.illustrationx.com/sg/**MarkWatkinson**

© All rights reserved

ILLUSTRATIONX
Connecting You to a World of Illustration

Mark Watkinson

www.illustrationx.com/sg/**MarkWatkinson**

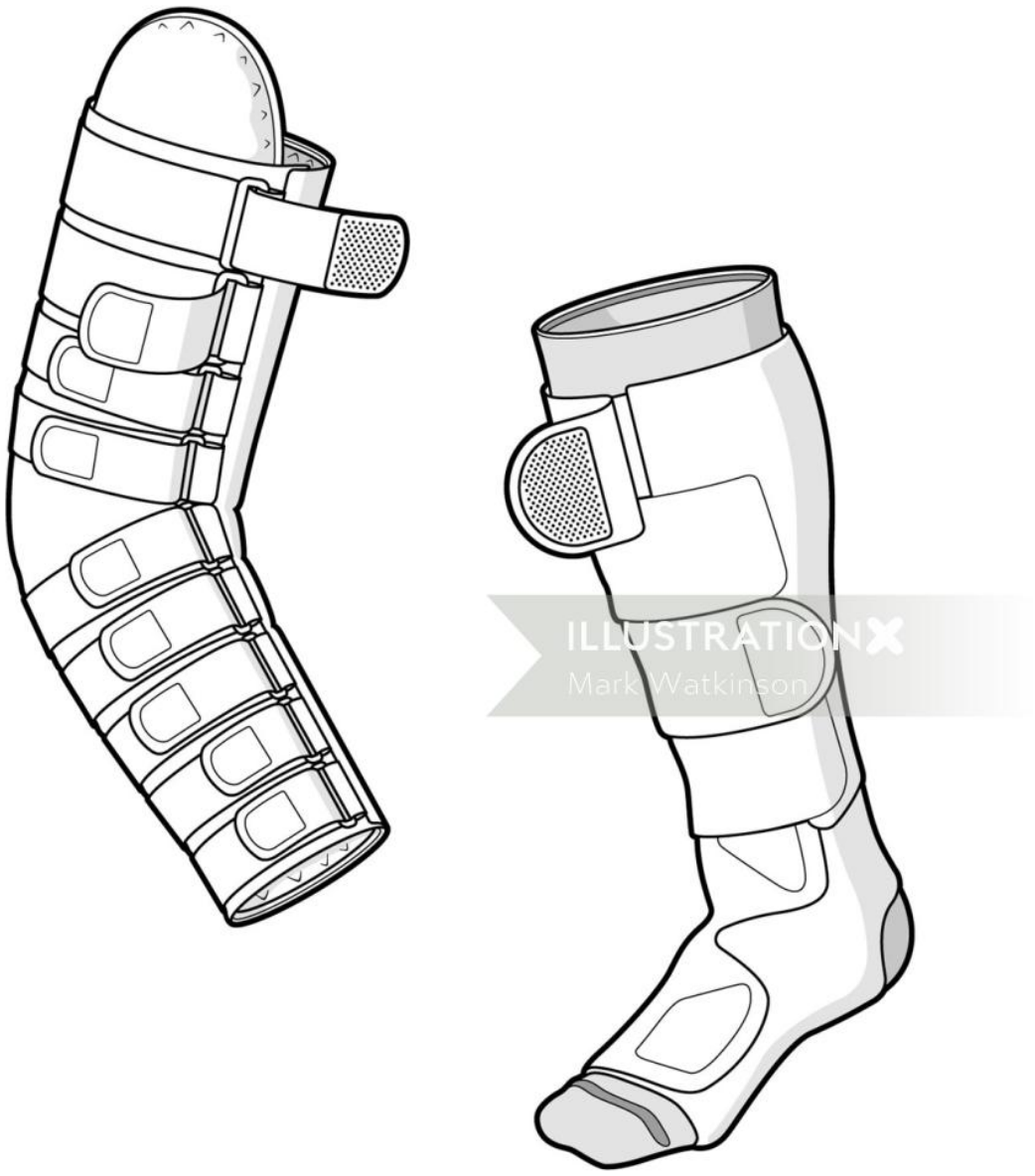

© All rights reserved

ILLUSTRATIONX
Connecting You to a World of Illustration

Mark Watkinson

www.illustrationx.com/sg/**MarkWatkinson**

© All rights reserved

ILLUSTRATIONX
Connecting You to a World of Illustration

Need advice?

We're ready to help

sea@illustrationx.com
+61 488 858 242

ILLUSTRATIONX
Connecting You to a World of Illustration

www.illustrationx.com/sg